No. 14800.

IN THE

United States Court of Appeals

FOR THE NINTH CIRCUIT

FRANCES P. SYRACUSE and NEW WONDER BAG CORP.,

Appellants,

vs.

HARRY PARIS,

Appellee.

APPELLEE'S BRIEF.

C. G. STRATTON,
210 West Seventh Street,
Los Angeles 14, California,
Attorney for Appellee.

WARNER, PERACCA & COWAN,
HENRY M. COWAN,
Of Counsel.

FILED

DEC 14 1955

PAUL P. O'BRIEN, CLERK

Parker & Son, Inc., Law Printers, Los Angeles. Phone MA. 6-9171.

TOPICAL INDEX

	PAGE
Introduction	1
Shanzer patent	2
Gale patent	6
Halpin patent	1
Nover patent	8
Vasquez patent	8
Summarizing prior patents	9
Appellee's condition	11
Hycon case	12
Design patent anticipates	14
Exhibit X	15
Conclusion	16

TABLE OF AUTHORITIES CITED

Cases

PAGE

Fritz W. Glitsch & Sons v. Wyatt Metal & Boiler Works, 106 USPQ 162 14

Gomez v. Granat Bros., 177 F. 2d 266 2

Great Atlantic & Pacific Tea Co. v. Supermarket Equipment Corp., 340 U. S. 147, 87 USPQ 303 10

H. C. White Co. v. Morton E. Converse & Son Co., 20 F. 2d 311, cert. den. 275 U. S. 547, 72 L. Ed. 419 15

Hargraves, In re, 53 F. 2d 900 15

Heath v. Frankel, 153 F. 2d 369 6

Hycon Mfg. Co. v. H. Koch & Sons, 104 USPQ 231 ..... 12, 13, 14

John Bean Mfg. Co. v. Creagmile, 123 F. 2d 182 4

Magarian v. Detroit Products Co., 128 F. 2d 544, 53 USPQ 658 10

Reckendorfer v. Faber, 92 U. S. 347, 23 L. Ed. 719 5

Robinson v. DiGaetano, 212 F. 2d 1, 101 USPQ 161 10

Schmeiser v. Thomasian, 106 USPQ 213 ..... 3, 10

U. S. Appliance Corp. v. Beauty Shop Supply Co., 121 F. 2d 149 5

Statute

United States Code, Title 35, Sec. 102(a) 16

Textbook

Walker on Patents (Deller's Ed.), p. 228 7

No. 14800.

IN THE

United States Court of Appeals

FOR THE NINTH CIRCUIT

FRANCES P. SYRACUSE and NEW WONDER BAG CORP.,

Appellants,

vs.

HARRY PARIS,

Appellee.

APPELLEE'S BRIEF.

Introduction.

This appeal is from a Summary Judgment by Judge Ernest A. Tolin, United States District Judge, dismissing the Complaint because of his determination that the patent in suit, No. 2,533,850, is invalid and void.

It will be noticed that the patent in suit is not in the Transcript of Record. If the Court wishes to be technical, this appeal could be dismissed upon that ground alone. For the record, the appellee contends that this appeal should be dismissed upon the ground that the record is insufficient to determine whether the lower court was correct or not in its decision. However, without waiver of this ground, appellee discusses the validity of the patent in suit hereinafter.

The patent in suit is a very narrow one with but a single, long, specific claim. The patent covers a utility bag for carrying diapers and nursing bottles. The patent covers such a bag with (1) two top pockets, (2) two end pockets that can be opened without opening the top pockets, (3) zippers for closing the pockets, and (4) waterproofing material therefor. The patent, of course, does not cover what is put into the pockets, to wit, soiled and clean diapers and nursing bottles. The words "slide fastener" are used in the patent, but for simplicity, the common, generic word "zipper" is used in this Brief.

It is believed that the appellee will show this Honorable Court that the only claim in suit is completely anticipated by the prior art, and that every one of the above elements is old.

Shanzer Patent.

The closest prior patent is probably Shanzer Patent No. Des. 147,477.* This patent was overlooked by the Examiner in the Patent Office when the patent in suit was pending, and, as a result, the *prima facie* presumption of validity of the patent in suit is believed entirely gone.

In *Gomez v. Granat Bros.,* 177 F. 2d 266, 268 (CA 9), this Honorable Court held:

> ". . . None of these prior patents were cited or considered by the patent office during the prosecution of the patent application for the Granat patent. In this situation it is argued that the presumption of *prima facie* validity is greatly weakened if not destroyed when pertinent prior art is not cited or con-

---

*Copies of all prior patents referred to in this Brief are bound herewith at the end of this Brief.

sidered by the patent office, and this court has so held. Stoody v. Mills Alloys, 9 Cir., 67 F. 2d 807; Mettler v. Peabody Engineering Corp., 9 Cir., 77 F. 2d 56; McClintock v. Gleson, 9 Cir., 94 F. 2d 115. See, also: France Mfg. Co. v. Jefferson Electric Co., 6 Cir., 106 F. 2d 605; Seiberling Rubber Co. v. I. T. S. Co., 6 Cir., 134 F. 2d 871. It seems clear that these patents must be classified as pertinent prior art."

See also *Schmeiser v. Thomasian,* 106 USPQ 213 (CA 9), in which this Honorable Court affirmed the District Court's finding that a certain reference

> ". . . is more pertinent to the alleged invention . . . than any of the cited art . . . This Henderson patent destroys the presumption of validity of the . . . patent . . . in suit."

The Shanzer patent is a design patent and is, therefore, classified in a different place in the Patent Office than the patent in suit, which is a mechanical patent. This is probably the reason why the Examiner overlooked the Shanzer patent. The patent in suit itself shows that it is classified in Class 150, subclass 34 (page 1 of patent in suit) while the Shanzer patent shows that it is classified in Design Class 87, subclass 3 (page 1 of said patent).

The Shanzer patent shows and describes a design for a "Combined Bottle and Diaper Utility Bag" (see its title, specification and claim). Fig. 1 is "front . . . view" of the bag. Fig. 2 is an end view of the bag with an end zipper open, showing "the right-hand bottle compartment in open position." Fig. 3 is a top view of the bag with the top zipper open, showing "the diaper compartment in open position."

The "circular elements" at the ends of the zipper in Fig. 3, are "the wall portions of the bottle compartments."

Briefly, the Shanzer patent has (a) a top pocket for diapers, (b) two end pockets for nursing bottles, which can be opened without opening the top pocket, and (c) zippers for separately closing the top and end pockets.

The only feature missing is that Shanzer has only one top pocket. However, having two top pockets would be mere multiplication and would not amount to invention. If it were invention to have two pockets instead of one, then it would be patentable to someone else to provide three pockets instead of two, it would be patentable to another person to provide four pockets, and still another could get a patent on five pockets, *ad infinitum.* This is believed to reduce to an absurdity the appellants' claim that the patent in suit is patentable over Shanzer because it has merely multiplied the pockets and has two diaper pockets instead of one!

The courts long since have recognized that mere multiplication is not invention. As stated in *John Bean Mfg. Co. v. Creagmile,* 123 F. 2d 182, 185-186 (CA 9),

> "Nor can invention be predicated on the mere multiplicity in use of ancient devices."

Appellant's argument that there is a new, patentable combination in having two diaper pockets is believed completely answered by pointing out that each diaper pocket in the patent in suit performs its function (of holding diapers) without any help from, or cooperation with, the other diaper pocket. They are placed side by side in a mere aggregation for convenience merely, the same as in the famous pencil eraser case of *Reckendorfer v. Faber,*

92 U. S. 347, 23 L. Ed. 719, which held that an eraser at the end of a pencil was not patentable even though

> ". . . It may be more convenient . . . This, however, is not invention within the patent law, as the authorities cited fully show. There is no relation between the instruments in the performance of their several functions, and no reciprocal actions, no parts used in common."

The two conveniently but entirely independent pockets are a mere aggregation. The argument that one pocket is for clean diapers and the other is for soiled diapers merely states the *use* of them, and does not define a new construction that is patentable. The particular use of the pockets is not patentable.

Furthermore, it would not involve invention to make Shanzer's bottle pockets of waterproof material, if they are not so already. This would be mere substitution of materials, which is not patentable. The mere substitution of rubber for other material has been held not to involve invention in *U. S. Appliance Corp. v. Beauty Shop Supply Co.,* 121 F. 2d 149, 150 (CA 9):

> "A consideration of these prior patents shows similar devices and it will be found that the patented device merely substitutes flexible rubber for other material used in the prior art to make a jacket. A substitution of one material with known characteristics for another material does not rise to the dignity of invention. Rubber Tip Pencil Co. v. Howard, 20 Wall. 498, 22 L. Ed. 410; Oliver-Sherwood Co., et al. v. Batterson-Ballagh Co., 9 Cir., 95 F. 2d 70. Similar jackets are found in the prior art."

The prior patents cited hereinafter and bound at the end of this Brief show that waterproof material is well known in the art of utility bags.

See, also, *Heath v. Frankel,* 153 F. 2d 369 (CA 9), to the effect that "mere substitution of one material for another is not patentable" in the absence of new and unexpected results. It is certainly not new or unexpected that waterproof material would be desirable between soiled diapers and a baby's nursing bottle.

Gale Patent.

If there were any doubt that there *might* be invention involved in providing a diaper-nursing bottle utility bag with (1) two pockets for diapers instead of only one pocket, or (2) waterproof material for such pockets, all such doubt would be quickly resolved against the patent in suit when Gale Patent 1,617,629 (which was also overlooked by the Examiner) is considered.

Gale's utility bag not only has holders for two or more nursing bottles, but also has two waterproof, open-topped pockets for diapers! First, Gale provides "any number" (page 1, line 106) of holders 21 for nursing bottles 23. Second, Gale shows a pocket 24 that is "open at its top . . . to receive soiled apparel." Third, Gale suggests "waterproof material" (page 2, line 6) for the diaper pockets. Moreover, Gale suggests the provision of a second "identical pocket 24" (page 2, lines 23-26) whereby two open-topped, waterproof pockets would be provided in his utility bag.

To provide Shanzer with two diaper pockets instead of one, as suggested by Gale, and to make such pockets waterproof, as also suggested by Gale, would scarcely seem to involve invention. Nothing new would be involved.

Halpin Patent.

If doubt still persisted that invention might be involved over Shanzer and Gale combined because the patent in suit uses zippers on both of its diaper pockets, Halpin Patent 2,025,101 would seem to dispel such doubt entirely.

Halpin (also overlooked by the Examiner in the patent in suit) has two open-top pockets in a small handbag that are independently closed by zippers 29 and 30 (page 2, column 1, lines 33-35). The zipper 30 closes the top opening of a compartment or pouch 36, and can be opened "without disturbing the contents of the main bag compartment" (page 2, column 2, lines 26-27), which second compartment is opened by zipper 29 (see Fig. 4 of Halpin's drawing).

Here again we see that it is not new to provide two top-zippered compartments in a handbag with a "rubber" (page 2, column 2, line 9) partition between the two compartments. Halpin suggests that this is to contain "a wet bathing suit and the like," but its usefulness for a soiled diaper is equally clear. It is submitted that using one of the pockets of Halpin for soiled diapers instead of a wet bathing suit would only be finding a different use for an old article, which is well established as not constituting invention. As stated in *Walker on Patents,* Deller's Edition, page 228:

> "It is likewise not invention to use an old article of manufacture for a new and analogous use." (Citing five Supreme Court cases.)

Halpin is also thought to anticipate another feature of the claim of the patent in suit. Not only does Halpin have the "waterproof partition panel within said body dividing the interior thereof into two laterally spaced com-

partments, one of which is adapted to receive clean diapers, and the other being adapted to receive soiled diapers" (as stated by the claim of the patent in suit) but also "the top edge of said panel [is] attached to the underside" of the "strip of material" between the two top openings. The fact that this strip is claimed as "narrow" is no patentable distinction. However, the portion of the top wall 11 of Halpin between the zippers 29 and 30 is narrower than the bottom 15, so it is narrow by comparison.

Making the bottle pockets of Shanzer of waterproof material would not seem to involve any invention, since both Gale and Halpin suggest the uses of waterproof material when and where waterproofing is desirable. It can hardly seem that the use of waterproof material where useful would rise to the dignity of invention.

Nover Patent.

Nover Patent 1,235,049 is cited to show that it is old to have side-by-side, open-top pockets in a handbag with the dividing panel fastened to a "narrow strip of material" between the openings. The narrow strip is shown at 14 in Nover, and the inner, abutting stretches of the pockets 15 and 28 together constitute a "panel" that is "attached to the underside of said strip of material," as covered in the claim of the patent in suit.

Vasquez Patent.

Vasquez Patent 2,429,856 is cited to show the use of zippers in handbags in a multitude of places: top, ends, sides; in fact, anywhere desired. Nover and Vasquez were also overlooked by the Examiner.

It is submitted that it would not constitute invention to substitute Vasquez' zippers for Nover's clasps 21 and 30, to provide two side-by-side pockets that could be opened separately from the top.

Summarizing Prior Patents.

Summarizing the prior art in this case, every single thing in the claim in suit is old in handbags: (1) a handbag for carrying clean and soiled diapers (Gale and Halpin patents); (2) a handbag for carrying nursing bottles (Shanzer and Gale patents); (3) a utility bag "having horizontal top and bottom edges, and vertical sides and ends" (Shanzer patent); (4) the top having "two laterally spaced, longitudinally extending openings" (Gale, Halpin and Nover patents); (5) "narrow strip of material" separating said two openings (Halpin and Nover patents); (6) "waterproof partition panel within said body dividing the interior thereof into two laterally spaced compartments" (Halpin and Gale patents); (7) "top edge of the panel being attached to the underside of said strip of material" (Halpin and Nover patents); (8) zippers "selectively operable from the outside of the sandbag to open either one of said compartments without opening the other" ("handbag" is no doubt meant, instead of "sandbag") (Halpin and Vasquez patents); (9) end "pockets for nursing bottles" in order "to provide access to either of said bottle pockets without opening said diaper compartments" (Shanzer patent); and (10) waterproofing pockets when needed (Gale and Halpin patents).

In short, there is absolutely nothing new in the claim in the patent in suit. It is all old. It seems safe to assert that if the Examiner had found the Shanzer, Gale, Halpin, Nover and Vasquez patents, he would never have allowed even the one narrow claim of the patent in suit.

It did not involve a patentable combination to bring together old elements in an old aggregation. The case of *Great Atlantic & Pacific Tea Co. v. Supermarket Equipment Corp.,* 340 U. S. 147, 87 USPQ 303, very strongly emphasized this. See what has been called by the Fifth Circuit, "Mr. Justice Jackson's classic admonition":

> "Courts should scrutinize combination patent claims with a care proportioned to the difficulty and improbability of finding invention in an assembly of old elements. The function of a patent is to add to the sum of useful knowledge. Patents cannot be sustained when, on the contrary, their effect is to subtract from former resources freely available to skilled artisans. A patent for a combination which only unites old elements with no change in their respective functions, such as is presented here, obviously withdraws what already is known into the field of its monopoly and diminishes the resources available to skillful men. This patentee has added nothing to the total stock of knowledge, but has merely brought together segments of prior art and claims them in congregation as a monopoly." (See, also, *Robinson v. DiGaetano,* 212 F. 2d 1, 101 USPQ 161 (CA 5).)

In the present case, there is no patentable combination, the old elements perform their old functions in the old manner. The patent in suit certainly "added nothing to the total stock of knowledge."

This Honorable Court recently stated the same principle in the case of *Schmeiser v. Thomasian,* 106 USPQ 213, 215 (CA 9), saying that "the applicable law has been laid down in this circuit as follows" (quoting from *Magarian v. Detroit Products Co.,* 128 F. 2d 544, 545, 53 USPQ 658, 660 (CA 9):

> "'The combining of old elements does not rise to the dignity of invention unless a new result is pro-

duced or unless an old function is performed in a new way. Bailey v. Sears, Roebuck & Co., 9 Cir., 115 F. 2d 904, 906, 47 USPQ 407, 410. To render invalid the claim of a combination patent it is not necessary that all the elements of the combination be found in a single prior patent. "If they are all found in different prior patents and no new functional relationship arises from the combination, the claim cannot be sustained." Eagle v. P. & C. Hand Forged Tool Co., 9 Cir., 74 F. 2d 918, 920, 24 USPQ 181, 182; Mettler v. Peabody Engineering Corporation, 9 Cir., 77 F. 2d 56, 57, 25 USPQ 307, 308. Appellant's device involved no more than mechanical adaptation of old parts.' "

Appellee's Condition.

Appellee is a small business man who has not had enough business even to incorporate. The expense of this case to date has been very oppressive upon him. Even defending himself in the lower court and prosecuting this appeal has by his standards been very expensive and a tremendous burden and a hardship.

It is, therefore, respectfullly and sincerely pleaded that this case be determined by this Honorable Court upon the record before it and not be sent back for a trial. The appellants had ample opportunity to file any affidavits in the lower court which they desired. Both appellants' present counsel and former counsel were present during the oral argument below, and appellants' present counsel and J. Calvin Brown, another well-known patent lawyer, both filed affidavits [Tr. of Rec. pp. 18-22] in due time prior to the date of said hearing, and which were duly considered by the lower court. Appellants' present counsel also filed a Brief Amicus Curiae in the lower court [Tr.

p. 27, line 5], which was also considered by the lower court before rendering its decision in this case. No disputed issues of fact were raised by said affidavits. It is believed that appellants have had their day in court.

The appellee has submitted his defenses in the present Brief, and it is believed that the full record is before this Honorable Court. At a trial, appellee would present this same prior art and it is believed that the result would be the same.

It is submitted that nothing could be gained by sending this case back to the lower court. To do so would burden appellee further in addition to an already overpowering load.

If it seemed that appellants might win eventually by a trial of this case, there certainly would be merit in sending this case back, but in view of the series of very close prior patents which were overlooked by the Examiner, it would appear that no trial could produce any other result than already obtained, to wit, that the very narrow patent in suit is invalid because every single feature is old in one or more prior patents, and there is no patentable combination shown in the patent in suit. It would seem that if there ever was a case that should be affirmed, this is the one.

Hycon Case.

It is believed that the case of *Hycon Mfg. Co. v. H. Koch & Sons,* 104 USPQ 231 (CA 9), principally relied upon by appellants, is not in point in the present case. There is no dispute as to the material facts in the present case, and all such facts are at this time before this Honorable Court. The trial court has weighed the evidence, documentary and testamentary, so, as stated in footnote 2

to the *Hycon* case, "there is a strong policy for affirmation on appeal."

The interest of the public, as pointed out by this Honorable Court in said case, is paramount. The decision by the lower court in this case, holding the patent in suit invalid does "relieve the public from an asserted monoply" (footnote 11 of the *Hycon* case).

The instant case lacks other phases of the *Hycon* case. In that case, there was "an effort to present some testimony which was precluded because it was indicated the nature of a summary judgment prevents the trial of any issue of fact." No testimony was precluded in this case.

In the *Hycon* case, the lower court did not find facts, but only rendered "mere conclusions in order to hold a patent valid." Moreover, there was no indication "why the trial judge thought the device was an invention nor why the patented article was differentiated from the prior art." In the present case, the lower court did find facts, to wit, the prior patents, and distinctly pointed out [Tr. pp. 16-17, pars. "8" to "14"] why the present device was not patentable over the prior art, and why it could not be differentiated from the prior patents which were overlooked by the Examiner.

Moreover, this Honorable Court held that the findings of fact in the *Hycon* case "were entirely inadequate." It is believed that the findings in the present case are complete, specific and factual, so that the present case is not presented upon "an inadequate basis laid by interested parties" who joined together in motions for summary judgment which did not adequately present or determine facts, as was done in the *Hycon* case.

It is believed that the present case does not place upon this Honorable Court the burden of trying this case, but rather permits "exercising the normal function of review," for which this Honorable Court is constituted, as pointed out in the *Hycon* case.

For these several reasons, it is believed that the *Hycon* case is not determinative of the present issues and is not authority for sending the present case back for trial upon facts which are undisputed. "An indispensable prerequisite to a [summary] judgment is the absence of a material question of fact," as this Court stated in the *Hycon* case. Any expert called by appellants could not change the undisputed facts of the existence and disclosures of the prior art. There is no issue of any material fact in the present case!

The Fifth Circuit in a case since the *Hycon* case, to wit, *Fritz W. Glitsch & Sons v. Wyatt Metal & Boiler Works,* 106 USPQ 162 (CA 5, July 15, 1955) stated:

> ". . . the issue of whether a particular patent meets the requisite standard of invention essential to validity is now generally regarded as a fully reviewable question of law."

Design Patent Anticipates.

A large part of Appellants' Brief is spent trying to establish what is believed to be a false premise, to wit, that a design patent cannot anticipate a mechanical patent. It is submitted that appellants' authorities do not establish this proposition.

On the contrary, it seems quite clear from the authorities, which appear to be squarely in point, that a design patent may anticipate a mechanical patent, if it shows what is covered in the mechanical patent. As stated by

Judge Learned Hand in *H. C. White Co. v. Morton E. Converse & Son Co.,* 20 F. 2d 311, 313 (CA 2), cert. den. 275 U. S. 547, 72 L. Ed. 419:

> "A design patent may anticipate a mechanical, Lein v. Myers, 105 F. 962 (C.C.A. 2)."

See also the following from the three-judge bench of the Court of Customs and Patent Appeals, in Washington, D. C.:

> "It is well-established law that a design patent may anticipate a mechanical patent and vice versa. *In re* Walter, 39 F. (2d) 724, 17 C.C.P.A. 982; *In re* Dalton, 37 F. (2d) 420, 17 C.C.P.A. 826; *In re* Eifel, 35 F. (2d) 70, 17 C.C.P.A. 582; *In re* Staunton, 35 F. (2d) 63, 17 C.C.P.A. 579; *In re* Rutledge, 47 F. (2d) 797, 18 C.C.P.A. 1081; Lein v. Myers *et al.* (C.C.A.), 105 F. 962; White Co. v. Converse & Son Co. (C.C.A.) 20 F. (2d) 311"
>
> *In re Hargraves,* 53 F. 2d 900.

It is believed that the foregoing high-type of authorities, that are squarely in point, clearly establish that a design patent is a proper anticipation against a mechanical patent, for everything that is shown in the design patent.

Exhibit X.

Appellants have placed in the record affidavits relating to Exhibit X, a brief case which appellants' counsel received as a present some years ago. This exhibit was introduced in an effort to show that the Shanzer patent is invalid. Appellee does not contest this, or raise an issue thereon (although, in passing, it might be said that it is believed that the conventional brief-case of Exhibit X does not anticipate the appearance or design of Shanzer's

utility, diaper-nursing bottle bag). However, it is immaterial whether the Shanzer patent is valid or invalid. It is still a prior patent. As clearly stated in Title 35, U. S. C. 102(a), a person is not entitled to a patent where,

"(a) the invention was . . . patented."

The statute does not state that the prior patent has to be a valid one before it can anticipate. Any patent, valid or invalid, constitutes an anticipation of any subsequent patent on the same subject matter. Thus, Exhibit X is immaterial as far as the pertinence of the Shanzer patent is concerned.

Conclusion.

In conclusion, it is submitted that the patent in suit is clearly invalid in view of the prior art overlooked by the Examiner, and that the judgment of the lower court, based upon full and complete findings, should be affirmed.

Respectfully submitted,

C. G. Stratton,

Attorney for Appellee.

Warner, Peracca & Cowan,
Henry M. Cowan,

Of Counsel.

M. NOVER.

HAND BAG.

APPLICATION FILED MAR. 26, 1915.

1,235,049.

Patented July 31, 1917.

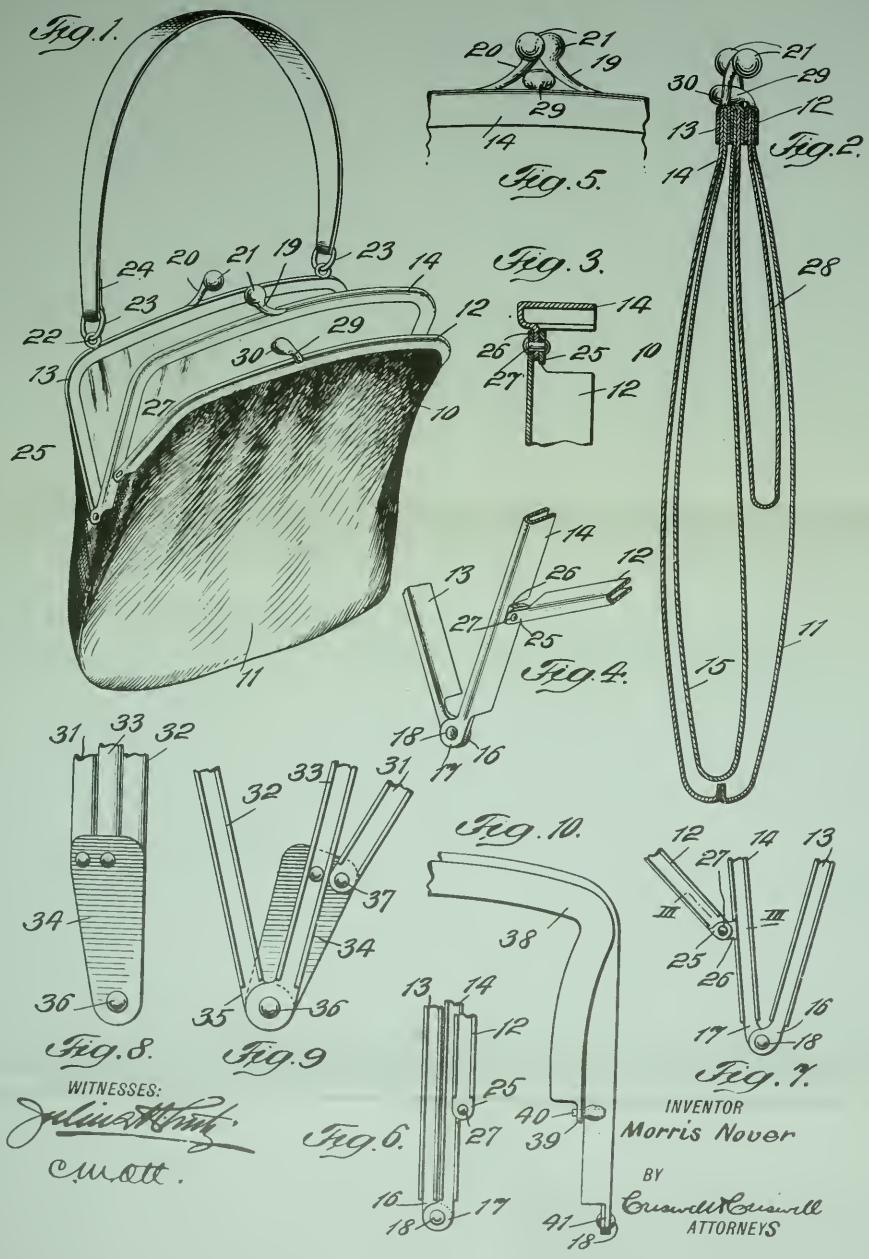

WITNESSES:

Julian A. Hunt.

C. M. Ott.

INVENTOR

Morris Nover

BY

Crowell & Crowell

ATTORNEYS

UNITED STATES PATENT OFFICE.

MORRIS NOVER, OF NEW YORK, N. Y.

HAND-BAG.

1,235,049. Specification of Letters Patent. Patented July 31, 1917.

Application filed March 26, 1915. Serial No. 17,187.

To all whom it may concern:

Be it known that I, MORRIS NOVER, a citizen of the United States, and a resident of New York, county and State of New York, have invented certain new and useful Improvements in Hand-Bags, of which the following is a full, clear, and exact description.

This invention relates more particularly to small hand-bags for the use of women.

One of the primary objects of the invention is to provide a hand-bag in which there are one or more deep pockets for carrying various articles, and a shallow pocket adapted for small articles as change, handkerchiefs or the like, and which are so arranged as to permit independent access to the different pockets.

Another object of the invention is to provide a hand-bag or the like in which one member of a metal frame serves as a hinged connection for other frame members, and which support deep and shallow pockets.

Another object of the invention is to provide a simple and efficient hinge for the frame members.

A further object of the invention is to provide simple and efficient means whereby the frame members for the pockets may be pivoted at different points.

A still further object of the invention is to provide a simple and efficient clasp for the frame members of the different pockets to permit independent access to the pockets.

With these and other objects in view, the invention will be hereinafter more particularly described with reference to the accompanying drawings which form a part of this specification, and will then be pointed out in the claims at the end of the description.

In the drawings, Figure 1 is a perspective view of one form of device or article embodying my invention, showing the frame members positioned for access to both pockets.

Fig. 2 is an enlarged vertical section of the device, with the clasp in a closed position.

Fig. 3 is an enlarged transverse section, taken on the line III—III of Fig. 7, showing one form of hinge for the frame members of the small pocket.

Fig. 4 is a fragmentary perspective view of the hinge portions of the frame members.

Fig. 5 is an enlarged front elevation of the clasp.

Fig. 6 is a fragmentary inside elevation of the hinge portion of the frame, the parts being shown in a closed position.

Fig. 7 is a view similar to Fig. 6, except that the frame members are shown in an open position.

Fig. 8 is a fragmentary side elevation of the frame members showing a different form of hinge.

Fig. 9 shows the hinge of Fig. 8, looking in an opposite direction and in an opened position; and

Fig. 10 is a fragmentary side elevation of still another hinged connection between the frame members for the small pocket.

The device 10 has an outer cover or body 11 of leather or of any other suitable material. The cover at one side and at the upper edge thereof is held to an outer frame member 12, while at the other side the cover is held to an outer frame member 13. An intermediate, inner or central frame member 14 is provided, which corresponds in size and shape to the member 13 but is larger than the frame member 12, the three members forming substantially a single element or frame. A pocket 15 of substantially the depth of the cover 11 is arranged therein, and has one edge thereof held to the outer frame member 13, and the other edge to the inner frame member 14, so that when the two members 13 and 14 are opened or separated as shown in Fig. 1, access may be had to the pocket 15, or when the frame members are moved to the position shown in Fig. 2, the mouth of the pocket is closed.

The frame members 13 and 14 are substantially U-shaped in form although they may vary so far as the form is concerned, and each member is substantially U-shaped in cross-section to provide clamping flanges.

The members 13 and 14 are cut away to provide integral lugs or projections 16 and 17 respectively, which are pivoted together by a rivet 18 or otherwise on opposite sides of the metal frame to adapt the said members 13 and 14 to be moved toward or from each other in the usual way.

A clasp member 19 is held to the frame member 14, and a corresponding clasp member 20 is held to the member 13. Each clasp has a ball or engaging portion 21 which are adapted when forced past each other to engage frictionally in such a way so as to hold the members 13 and 14 in close relation to close the mouth of the pocket or permit access thereto. The frame member 13 has an eye 22, at each side thereof, in which a ring 23 is held and to each ring is held one end of a strap or handle 24, it being understood that the strap or handle may be attached to any of the other frame members.

The frame member 12 is substantially the same shape as the frame members 13 and 14, but not of the same depth. The frame member 13 has its ends cut away to provide a hinged part or lug 25 at each end and is pivoted to the member 14 above the hinge provided by the lugs 16 and 17. A lug 26 is formed integral with the frame member 14 at each side thereof by cutting away one side of the frame member, and the lug 25 of the member 12 is pivoted to the lug 26 by a rivet 27 or in any other suitable way. A pocket 28 of any suitable material, much less in depth or smaller than the usual pocket 15 has one side thereof held between the flanges of the frame member 12, and the other side of said pocket is held between the flanges of the frame member 14.

It will be evident that the pocket 28 by reason of its shallow character may be made to contain articles to which access is frequently required, while the other or deeper pocket may be made to contain articles of greater value and wherein access is not always desirable particularly in public places.

To hold the frame member 12 in a closed position and to close the mouth of the pocket 28, I provide a member 29, which may have a knob 30 and which is adapted to frictionally engage the upper surface of the frame member 14 between the closed members 19 and 20. The member 29 may be forced from between the members 19 and 20 without disengaging said members 19 and 20, and in order that the clasp member 29 may be readily moved to a disengaged position, the knob portion 30 may extend outwardly beyond and over the frame 13 a sufficient distance for this purpose. Instead of the member 29 frictionally engaging the surface of the frame member 14 it may engage the shanks of the clasp member 19 and 20 or either of them or both surfaces of the frame member and the members 19 and 20.

Figs. 8 and 9 show a form of hinge which may be called a one piece hinge. The frame members 31, 32 and 33 may correspond to the frame members 12, 13 and 14 of Figs. 1 and 2. The inner member 33 has a plate portion 34 at the lower part of which the lug 35 of the frame member 32 is pivoted, as by a rivet or pin 36. The plate portion 34 may be formed integral with the intermediate member 33 or separate therefrom as preferred. At the outer portion of the plate member 34, the frame member 31 is pivoted thereto by a rivet or pin 37. The action of the frame members of the metal frame of the bag is substantially the same as that already described.

In Fig. 10 the member 38 is for the shallow pocket and differs somewhat in shape from that already described. At the lower end of the frame member 38 is a lug 39 which is held to move on a pivot, pin or stud 40, forming a hinge. The two other members of the frame may be hinged together as at 41 in the manner already described.

Having thus described my invention, I claim as new and desire to secure by Letters Patent:—

1. A hand bag comprising a frame having three arched channel members, two of said members being of substantially the same dimensions and pivotally connected together at their ends, the remaining frame member being of less height than the other members and being pivotally held to the outer side of one of said members with its upper portion in alinement with the upper portions of the other members, a pocket of flexible material having its opposite sides held within the channel portions of the two larger frame members, and a pocket of flexible material of less depth than said first-mentioned pocket having one side thereof held within the channel portion of the smaller frame member and its opposite side held within the channel portion of the adjacent frame member extending above the pivotal point of the smaller frame member.

2. A hand bag comprising a frame having three arched sheet metal channel members, two of said members being of the same height and formed with depending lugs at their lower ends pivotally held together, the remaining frame member being of less height than the other members and having depending lugs at its outer ends pivotally held to lugs stamped outwardly from the outer walls of the vertical portions of one of said larger frame members intermediate the ends thereof, a pocket of flexible mate-

rial having its opposite sides held within the channel portions of the larger frame members, and a second pocket of less depth than said first pocket and having its outer side held within the channel portion of the smaller frame member and its inner side held within the channel portion of the adjacent frame member above the pivotal point of the smaller frame member, and means for locking the frame members together to close the mouths of said pockets.

This specification signed and witnessed this 24th day of March, A. D. 1915.

MORRIS NOVER.

Witnesses:
LESTER C. TAYLOR,
C. BARTELS.

Feb. 15, 1927. 1,617,629

J. E. GALE

VALISE

Original Filed Dec. 4, 1923

Fig 1

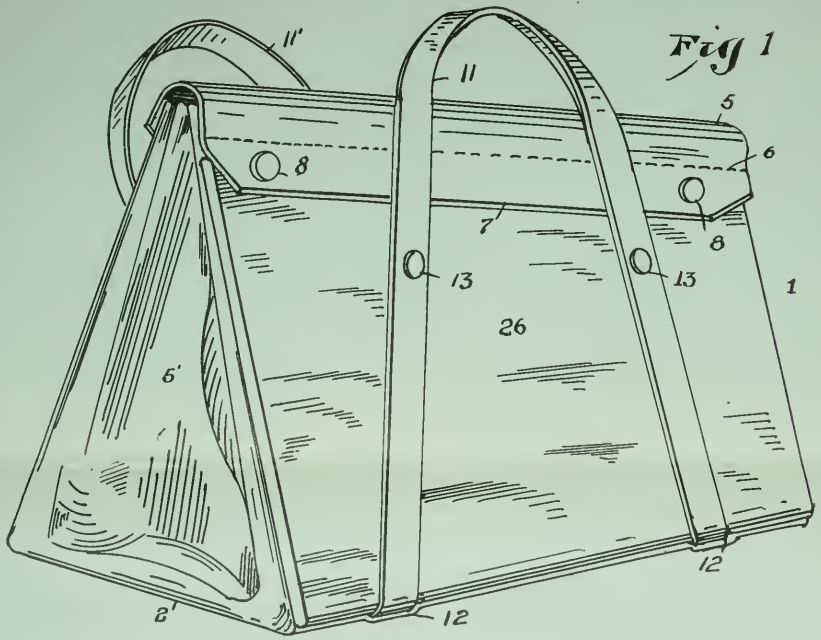

Fig. 2

Fig. 4.

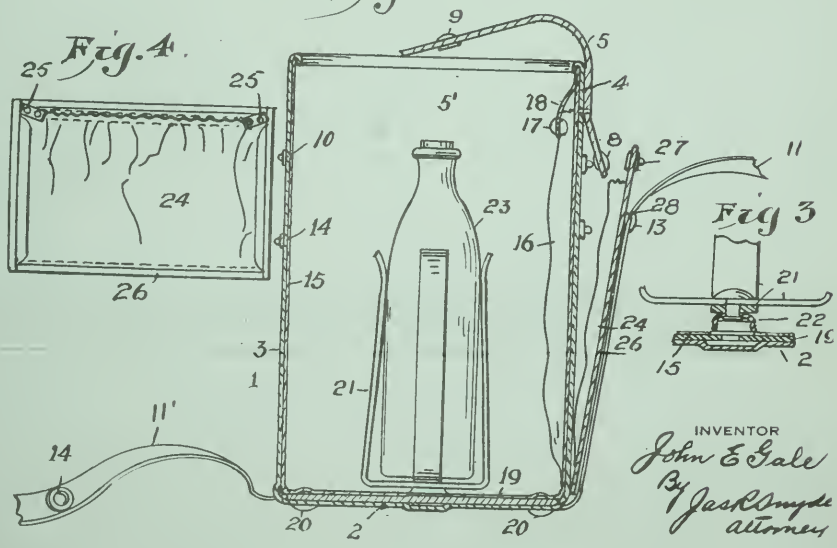

Fig 3

INVENTOR
John E Gale
By Jas R Snyder
attorney

Patented Feb. 15, 1927. 1,617,629

UNITED STATES PATENT OFFICE.

JOHN E. GALE, OF PITTSBURGH, PENNSYLVANIA.

VALISE.

Application filed December 4, 1923, Serial No. 678,424. Renewed May 5, 1926.

This invention relates to certain new and useful improvements in valises and while primarily designed for infant's equipment, it will be obvious that the device may be employed for any purposes wherein it is found to be applicable.

Important objects of this invention are to provide a valise of the type stated, which includes a plurality of receptacle supports for carrying liquid containers in the vertical position, which permits of the removal of said supports to allow of its use for receiving any articles in the usual manner and which embodies a detachable outside pocket preferably designed for storing soiled garments.

Further objects of the invention are to provide a device of the character stated which is simple in its construction and arrangement, strong, durable and efficient in its use, sanitary, compact, attractive in appearance, and comparatively inexpensive to manufacture.

With the foregoing and other objects in view, which will appear as the description proceeds, the invention resides in the combination and arrangement of parts and in the details of construction hereinafter described and claimed, it being understood that the changes in the precise embodiment of the invention hereinafter disclosed can be made within the scope of what is claimed without departing from the spirit of the invention.

In the drawing forming a portion of this specification and wherein like numerals of reference designate corresponding parts throughout the several views:—

Figure 1 is a perspective view of a valise in accordance with my invention.

Figure 2 is a transverse cross sectional view thereof.

Figure 3 is a fragmentary view of the bottom and associated parts.

Figure 4 is a plan view of the inner side of the detachable pocket.

Referring in detail to the drawings, reference numeral 1 denotes the body portion of the valise constructed from any suitable material, preferably leather. The body portion 1 consists of an elongated rectangular bottom 2 connected with the side members 3 and 4 and the bellows end members 5′. The latter permit of the convergence of the side members 3 and 4 toward their upper ends when the valise is in the closed position, as shown in Figure 1 of the drawing.

A cover 5 is stitched, as indicated at 6, adjacent to the upper edge of the side member 4. The cover 5 is so connected to the side member 4, by the stitching 6, as to leave the marginal edge of the cover 5 free, providing thereby a flap 7. The latter is provided with a clasp socket 8 positioned adjacent to each end thereof. The cover 5 overlaps the upper edges of the side members 3 and 4 and is locked in the closed position by the engagement of the clasp sockets 9, mounted in the marginal edge of the free side of the cover 5, with corresponding clasp balls 10 mounted in the side member 3.

The valise is provided with a pair of looped strap handles 11 and 11′, each having its lower ends permanently connected to respective marginal side edges of the bottom 2, as indicated at 12. The handle 11 is detachably connected to the side member 4 slightly above the horizontal center of the latter, by means of the snap clasps 13. The handle 11′ is likewise connected to the side member 3. by means of the snap clasps 14.

The body portion 1 is lined throughout by a suitable lining 15. The side member 4 carries a pocket 16 on its inner side. The pocket 16 is open at its top and may be secured in the closed position by the snap clasp 17, a portion of which is carried by a tab 18 fixed to the upper edge of the side member 4.

Positioned between the bottom 2 and the bottom lining is a flat rectangular metal bottom plate 19 of a configuration corresponding to the contour of the bottom 2. The bottom plate 19 is detachably secured in position by the snap clasps 20, one of which is positioned at each corner of the bottom. The clasp balls are carried by, and depend from, the plate 19 and the associated sockets are mounted in the bottom 2.

A plurality of receptacle holders 21 are detachably mounted on the bottom plate 19 by means of suitable snap clasps 22. The clasp balls are mounted in the plate 19 and extend through the lining 15, and the clasp socket is carried by the holder 21. The holders 21 are praferably arranged in longitudinal alignment on the bottom plate 19 and any number to best meet conditions found in practice may be used.

Each of the holders 21 consists of four vertically disposed resilient fingers which are connected at their lower ends by the clasp socket of the clasp 22, as clearly shown in Figure 3 of the drawing. Each of the hold-

ers 21 is designed for supporting a bottle 23 in the vertical position so that the contents of the latter will not be liable to be split therefrom.

An independent pocket 24, preferably constructed of waterproof material and open at its top, is detachably secured by means of snap clasps 25, to the inner face of a panel 26. The pocket 24 is adapted to receive soiled apparel, of any nature, which would be objectionable to place within the valise.

For securing the panel 26 and the pocket 24 to the body portion 1, the panel 26 is provided with a snap clasp ball 27 at each upper corner adapted to engage the respective snap clasp sockets 8 mounted in the flap 7. The panel 26 is further provided with a pair of snap clasp balls 28 which are positioned to be engaged by the snap clasp sockets 13 mounted in the handle 11, whereby the panel 26 and associated pocket 24 will be compactly held in position against the side member 4 of the body portion. An identical pocket 24 may be held to the opposite side of the bag by means of snaps 10 and 14 on the side 3, and by the socket 9 on cover flap 5.

It will be noted that the holders 21 may be readily removed from the plate 19, thereby permitting of the use of the valise for the reception of any articles in the usual manner.

What I claim is:—

1. In a valise the combination of a body member, a separate removable pocket member arranged to lie against one side of the body member, a handle attached adjacent the bottom of the body member and arranged to extend upwardly thereof, mutually engageable fastening means on the pocket and on the handle, and fastening means on the body member arranged to engage the fastening means on the handle when the pocket is removed.

2. In a valise the combination of a body member, a cover on the body member and having a flap arranged to overlie the open end of the body member, a separate removable pocket member arranged to lie against one side of the body member, mutually engageable fastening means on the flap and on the pocket, and fastening means on the body member arranged to engage the fastening means on the flap when the pocket is removed.

3. In a valise the combination of a body member, a cover secured to one side of the body member adjacent the open end thereof, said cover having a flap arranged to serve as a closure for the body member and a false flap on the opposite side of the body member, separate removable pockets arranged to lie against the opposite sides of the body member, fastening means on both sides of the body member, fastening means on both pockets, and fastening means on both flaps arranged to engage either the fastening means on such side of the body member or the fastening means on the pockets.

4. In a valise the combination of a body member, a cover on the body member having a flap arranged to overlie the open end of the body member, a separate removable pocket member arranged to lie against one side of the body member, mutually engageable fastening means on the flap and on the pocket, fastening means on the body member arranged to engage the fastening means on the flap when the pocket is removed, a handle attached adjacent the bottom of the body member and arranged to extend upwardly thereof, and mutually engageable fastening means on the pocket and on the handle.

5. In a valise the combination of a body member, a cover on the body member having a flap arranged to overlie the open end of the body member, a separate removable pocket member arranged to lie against one side of the body member, mutually engageable fastening means on the flap and on the pocket, fastening means on the body member arranged to engage the fastening means on the flap when the pocket is removed, a handle attached adjacent the bottom of the body member and arranged to extend upwardly thereof, mutually engageable fastening means on the pocket and on the handle, and fastening means on the body member arranged to engage the fastening means on the handle with the pocket removed.

6. In a valise the combination of a body member, a cover attached to one side of the body member and adjacent the open end thereof, said cover having a flap arranged to serve as a closure for the body member and a false flap on the opposite side of the body member, separate removable pockets arranged to lie against the opposite sides of the body member, fastening means on both sides of the body member, fastening means on both pockets, fastening means on both flaps arranged to engage either the fastening means on such side of the body member or the fastening means on the pockets, handle members attached adjacent the bottom of the body member and arranged to extend upwardly thereof, and mutually engageable fastening means on both pockets and on both handles.

7. In a valise the combination of a body member, a cover attached to one side of the body member and adjacent the open end thereof, said cover having a flap arranged to serve as a closure for the body member and a false flap on the opposite side of the body member, separate removable pockets arranged to lie against the opposite sides of the body member, fastening means on both sides of the body member, fastening means on both pockets, handle member attached adjacent the bottom of the body member

and arranged to extend upwardly thereof, mutually engageable fastening means on both pockets and on both handles, and fastening means on the body member arranged to engage the fastening means on the handles when the pockets are removed.

8. In a valise the combination of a body member, a false flap adjacent the open end of the body member, a separate removable pocket member arranged to lie against one side of the body member, mutually engageable fastening means on the false flap and on the pocket, and fastening means on the body member arranged to engage the fastening means on the flap when the pocket is removed.

9. In a valise the combination of a body member, a false flap adjacent the open end of the body member, a separate removable pocket member arranged to lie against one side of the body member, mutually engageable fastening means on the false flap and on the pocket, a handle attached adjacent the bottom of the body member and arranged to extend upwardly thereof, mutually engageable fastening means on the handle and on the pocket member, and fastening means on the body member arranged to engage the fastening means on the handle when the pocket is removed.

10. In a valise the combination of a body member, a false flap adjacent the open end of the body member, a separate removable pocket member arranged to lie against one side of the body member, mutually engageable fastening means on the false flap and on the pocket, fastening means on the body member arranged to engage the fastening means on the flap when the pocket is removed, a handle attached adjacent the bottom of the body member and arranged to extend upwardly thereof, and mutually engageable fastening means on the handle and on the pocket member.

In testimony whereof I affix my signature.

JOHN E. GALE.

Dec. 24, 1935. A. HALPIN 2,025,101

PORTABLE RECEPTACLE

Filed June 11, 1935

Fig. 1

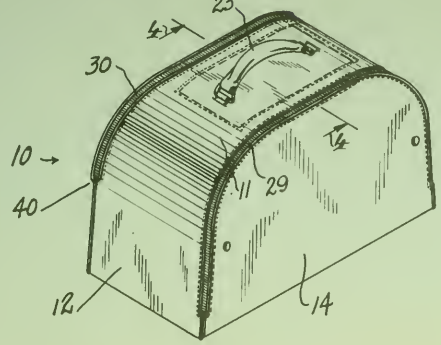

Fig. 4

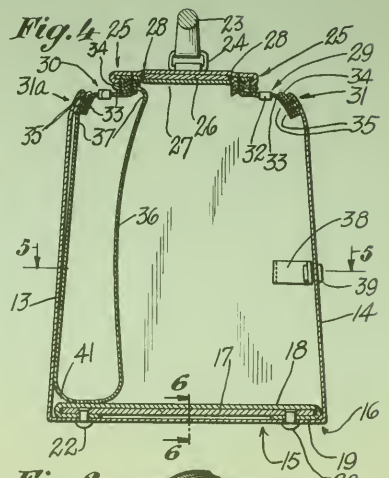

Fig. 2

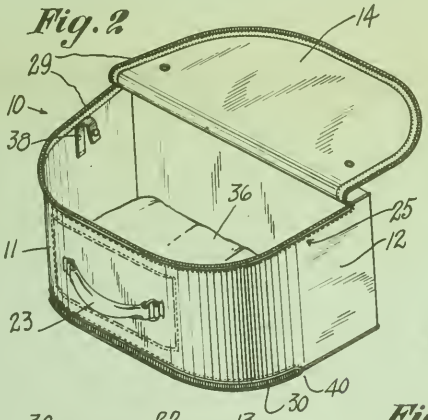

Fig. 3

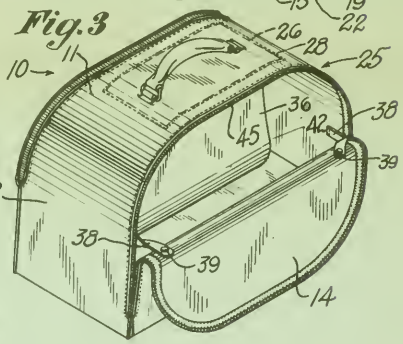

Fig. 5

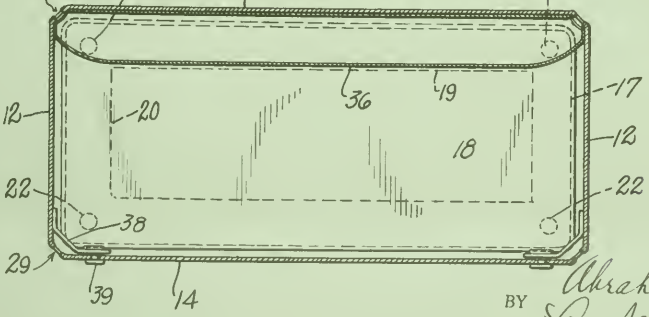

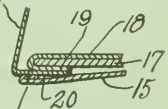

Fig. 6

INVENTOR.
Abraham Halpin
BY
Wm. Schumacher
ATTORNEY.

Patented Dec. 24, 1935 2,025,101

UNITED STATES PATENT OFFICE

2,025,101

PORTABLE RECEPTACLE

Abraham Halpin, New York, N. Y.

Application June 11, 1935, Serial No. 25,977

3 Claims. (Cl. 190—41)

This invention relates to portable receptacles and has among its objects the provision of an improved device of the character described adapted for particularly advantageous and convenient use as a traveling bag, and whereby packing and removal of articles is facilitated.

Another object of the invention is the provision of a device of the type mentioned having relatively few and simple parts so arranged and constructed as to require a minimum of time, labor and material in manufacture.

A further object of the invention is to furnish a device of the type mentioned characterized by a rigid bottom wall and an otherwise wholly pliable bag body, together with yieldable but sufficiently stiff reenforcing means to maintain the body in shape and to facilitate an even distribution of the stress exerted by a handle connected to the body for carrying the device, and so as to prevent the pliable body from distorting or relatively collapsing under the stress of the handle.

A further object of the invention is to construct a device of the class alluded to having a main compartment, and an auxiliary compartment therein, both compartments independently accessible through individual openings remote from each other, whereby different types of articles intended for different uses or at different times may be handled separately, and the device being highly compact, durable, neat and efficient in use.

Other objects and advantages of the invention will become apparent as the specification proceeds.

With the aforesaid objects in view, the invention consists in the novel combinations and arrangements of parts hereinafter described in their preferred embodiments, pointed out in the subjoined claims, and illustrated in the annexed drawing, wherein like parts are designated by the same reference characters throughout the several views.

In the drawing:

Figure 1 is an isometric perspective view showing a closed device embodying the invention.

Fig. 2 is a similar view of the open device lying on a side to facilitate packing, by reason of the arrangement of the device.

Fig. 3 is a similar view of the device in upright position and maintained only partially open to retain articles in the lower part of the bag.

Fig. 4 is an enlarged vertical sectional view taken on the transverse line 4—4 of Fig. 1.

Fig. 5 is a horizontal sectional diagrammatic view taken on the line 5—5 of Fig. 4.

Fig. 6 is a fragmentary diagrammatic sectional view taken on the line 6—6 of Fig. 4.

The advantages of the invention as here outlined are best realized when all of its features and instrumentalities are combined in one and the same structure, but, useful devices may be produced embodying less than the whole.

It will be obvious to those skilled in the art to which the invention appertains, that the same may be incorporated in several different constructions. The accompanying drawing, therefore, is submitted merely as showing the preferred exemplification of the invention.

Referring in detail to the drawing, 10 denotes a device embodying the invention. The same may reside in a portable receptacle having a bag comprising top and end walls 11, 12, respectively, consisting preferably of a single strip of pliable or flexible material, such as leather, composition or textile fabric.

The bag 10 may include a plurality of side walls 13, 14 likewise preferably consisting of a single strip or sheet of a material similar to that of the walls 11 and 12, and comprising a bottom portion or layer 15.

The bag 10 may have a bottom wall 16 stiffened or reenforced throughout so as to be rigid, and may comprise rigid material for this purpose. For example, the bottom wall may include a reenforcing slab or panel 17 of wood or composition, extending substantially throughout the bottom. This slab, if desired, may be covered by a sheet of textile fabric 18 infolded as at 19 around the ends and sides of the slab.

Underlying the end portions of the slab or panel 17, the end walls 12 may have portions 20 infolded for securement.

The layer 15 may underlie the panel 17 and the portions 20 and may be secured thereto by continuous transverse lines of stitching 21 at the ends of the bag. Rivets 22 may interconnect the panels and the parts 15 and 22 at the corners of the bag, and may afford heads to support the bag on the ground.

It is thus seen that the bag consists in the main of two pieces of material. One piece provides the top and end walls 11 and 12 and is longitudinally curved or arched over the bottom. The other piece provides the side walls 13, 14 and the finishing bottom layer 15 and extending under the bottom, being concaved upward and transversely thereof in contradistinction to the top and end walls. The stiffening means 17 lies preferably within the bag to afford a neat external finish. The various top, side and end walls

may be suitably interconnected, affording a bag that can be constructed with the least cutting, fitting, sewing or other fabrication of parts and having a high degree of strength.

A handle 23 may be suitably connected as at 24 to the top wall 11. To prevent longitudinal and transverse collapse or distortion of the top wall by the pull exerted thereon by the handle in carrying the bag, suitable reenforcing means may be provided as will now be described.

The reenforcements referred to include longitudinal strip means 25 extending continuously along and secured to the top and end walls 11, 12 and in close proximity to the side walls 13, 14, down to the bottom wall of the bag and substantially to the anchorage at the rivets 22. A reenforcement 26, consisting of a slab 26 of wood or the like may underlie the top wall and may be covered by a piece of fabric 27 stitched to the top wall by a line of stitching 28 extending continuously around the reenforcement 26. The latter may have side edges lying in relative proximity to the reenforcements 25. Since the means 24 is connected to the slab 26, the pull of the handle is equalized over the top wall and directly transmitted to the reenforcements 25 which act like cables to carry the bottom wall. The curved path of these cable like reenforcements is maintained by the side walls 13, 14 which continuously suspend the bottom wall and act as a uniform suspension means. Thus the shape of the pliable bag body is maintained.

If desired, one or more slide fasteners 29, 30 may be provided between portions of the top and end walls, and the side walls. Due to the proximity of the reenforcements 25, the latter are combined with the slide fasteners in unitary constructions. Preferably strip reenforcement means such as 31, 31*a* are also provided along the edges of the side walls on the opposite sides of the slide fasteners relative to the reenforcements 25.

The reenforcements 25 and 31, 31*a* may all be of duplicate construction and hence any one may be described. Each of the two series of hooks indicated at 32 may be connected to a stringer strip 33. A longitudinally folded strip of strong flexible material 34 may lie between the stringer and the adjacent infolded edge of the adjoining wall of the receptacle. A plurality of lines of stitching 35 may continuously interconnect the side wall with the strip 34 and the stringer 33 by passing therethrough. At the slide fastener 30, a pouch 36 may be provided openable by the slide fastener and suspended within the bag from the reenforcements 25 and 31*a* as by having edge portions 37 of the pouch continuously inserted into the corresponding reenforcements 25 and 31*a* and secured therein by the stitching 35. Details of the pouch will be later described.

It is noted that the slide fastener 29 extends substantially down to the bottom wall 16 of the bag. This permits the bag to be placed on a side as shown in Fig. 2 and opened wide with the wall 14 constituting a flap. Thus the bag may be packed with great convenience. If it should be desired to open the bag in upright position to remove an article without dumping the contents in the lower part of the bag, auxiliary holding means to limit the opening without affecting the freedom of the slide fastener may be provided. For example, short straps or tabs 38 may be affixed to the end walls 12 of the bag within the same and may have detachable or snap fastener engagement as at 39 with the side wall 14 intermediate the upper and lower ends thereof. If the flap or side wall 14 is now opened, regardless of the degree of opening of the slide fastener, the lower portion of said side wall remains closed to retain the contents in the lower part of the bag.

The slide fastener 30 extends only substantially midway down the side wall 13 and terminates at 40. This slide fastener controls the pouch 36 which consists of a thin limp fabric or rubber and is closed at the bottom 41 and at the lower portion of its ends as at 42. The upper portions of its ends as well as its upper edges are secured along opposite edges of the slide fastener and the pouch is thus sustained, principally by the adjacent reenforcement 25. The pouch 36 may receive articles such as shoes, a wet bathing suit, and the like.

It will be seen that this device lends itself to rapid and simple manufacture, as the reenforcements mentioned can be quickly attached, and the bag then assembled.

The manner of using the invention will now be briefly described. Miscellaneous articles can be packed into the pouch 36, and are readily accessible on opening and closing the slide fastener without disturbing the contents of the main bag compartment. The latter may be packed and used as shown in Fig. 2, and articles in the limp pouch 36 can be distributed to suit the packing, and a desired article removed or inserted in the position shown in Fig. 3. When packed, the handbag maintains its shape, and will not lose its form by stretching, distortion or the like.

If desired, the slide fastener 29 may comprise two slide fasteners, each beginning at 40 and terminating at a midpoint 45, indicated in Fig. 3. In this manner the slide fasteners can be opened downward to any desired degree at both ends so that the straps 38 may be eliminated. Of course a single slide fastener is cheaper, and straps 38 afford positive action.

It will be appreciated that various changes and modifications may be made in the device as shown in the drawing, and that the same is submitted in an illustrative and not in a limiting sense, the scope of the invention being defined in the following claims.

I claim:

1. A portable receptacle including a bottom wall of rigid material, top and side walls consisting of pliable material, the top wall being in the shape of an arc of large radius, reenforcements extending continuously along the meeting lines between the top and side walls and between the end and side walls and being secured to the bottom wall, a slide fastener extending continuously between one side wall and the top and end walls, a handle, and a stress distributing plate of rigid material connected to the handle and extending along the top wall and being fixed to the latter in proximity to said reenforcements.

2. A portable receptacle including a bag having a sheet of material providing a bottom wall and side walls extending upward therefrom, a second sheet of material providing a top wall and end walls downwardly extending therefrom, the top, side, end and bottom walls being interconnected, and the connection between the top and end walls and at least one side wall being releasable to constitute the said side wall, an openable closure means for the bag, a stiffening means for the bottom wall, reenforcement strips extending along the lines of connection between the side walls and the top and end walls, a sup-

porting handle connected to the top wall, and means connecting the handle to the top wall in relative proximity to and between the reenforcements to cause the stress exerted by the handle on the top wall in lifting the bag to be communicated by the reenforcements downward toward the region of the bottom wall.

3. A portable receptacle including an elongated normally upright bag having a downwardly openable pliable side wall to permit the bag to be packed when lying in a horizontal position, a slide fastener closure for said side wall, and releasable attaching means independent of the slide closure and located at the ends of the said side wall in spaced relation to the remote ends of the slide fastener for limiting the degree of opening of the side wall regardless of whether the slide fastener is fully open.

ABRAHAM HALPIN.

Sept. 9, 1947. M. SHANZER Des. 147,477

COMBINED BOTTLE AND DIAPER UTILITY BAG

Filed Sept. 17, 1946

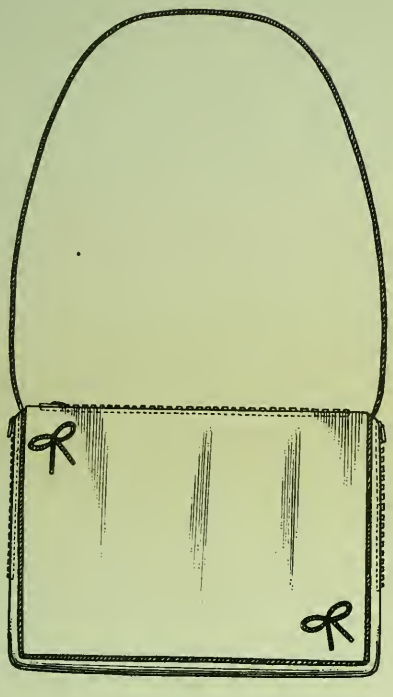

Fig. 1.

Fig. 2.

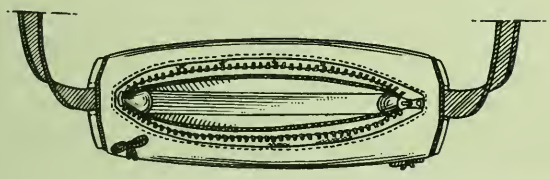

Fig. 3.

MAX SHANZER,
INVENTOR.

BY

Thomas B. Richards

ATTORNEY.

Patented Sept. 9, 1947

Des. 147,477

UNITED STATES PATENT OFFICE

147,477

DESIGN FOR A COMBINED BOTTLE AND DIAPER UTILITY BAG

Max Shanzer, New York, N. Y.

Application September 17, 1946, Serial No. 133,366

Term of patent 14 years

(Cl. D87—3)

To all whom it may concern:

Be it known that I, Max Shanzer, a citizen of the United States of America, residing in New York city, county of New York, and State of New York, have invented a new, original, and ornamental Design for a Combined Bottle and Diaper Utility Bag, of which the following is a specification, reference being had to the accompanying drawing, forming part thereof, wherein

Figure 1 is a front elevational view of a combined bottle and diaper utility bag showing my new design in closed position.

Figure 2 is an end elevational view showing the slide fastener portion of the right-hand bottle compartment in open position.

Figure 3 is a top plan view of the combined bottle and diaper utility bag, with a portion of the handle omitted for convenience of illustration, and showing the slide fastener portion of the diaper compartment in open position.

The circular elements visible at either end of the slide fastener opening in Figure 3, represent the wall portions of the bottle compartments.

The rear and opposite end of the article, not shown, are substantially the same in appearance as the front and end disclosed, except for the omission of the bow ornamentations in the rear.

I claim:

The ornamental design for a combined bottle and diaper utility bag, substantially as shown and described.

MAX SHANZER.

REFERENCES CITED

The following references are of record in the file of this patent:

UNITED STATES PATENTS

Number	Name	Date
D. 135,530	Rubin	Apr. 20, 1943

OTHER REFERENCES

Infants' and Children's Wear, June 1944, inside front cover.

New York Times clipping, October 15, 1944, Milgrim adv., "Rain or Shine."